SSRG International Journal of Mechanical Engineering
ISSN: 2348-8360/ https://doi.org/10.14445/23488360/IJME-V12I4P109

Volume 12 Issue 4, 109-116, April 2025
© 2025 Seventh Sense Research Group®

Original Article

Fatigue Life Prediction under Thermomechanical Loading in Cracked Structures: A Unified Approach

Otmane Aboulhassane[1]*, Abdelhadi El Hakimi[1], Abderrahim Chamat[2], Abdelhamid Touache[1]

[1]*Department of Mechanical Engineering, Faculty of Sciences and Technologies of Fes, Sidi Mohamed Ben Abdellah University, Fes, Morocco.*
[2] *Department of Industrial Engineering, Faculty of Sciences and Technologies of Fes, Sidi Mohamed Ben Abdellah University, Fes, Morocco.*

**Corresponding Author : otmane.aboulhassane@usmba.ac.ma*

Received: 11 February 2025 Revised: 09 March 2025 Accepted: 12 April 2025 Published: 30 April 2025

Abstract *- This study examines crack damage resulting from thermomechanical loading in tubular heat exchanger components, a vital concern for the safety and longevity of industrial facilities. The foundational concepts of fracture mechanics examine fatigue crack propagation mechanisms, emphasizing the characterization of stress fields at the crack tip via the stress intensity Factor (K) and the J-integral. Focus is directed towards a comprehensive methodology for predicting fatigue life, namely empirical models based on Paris' rule and its adaptations, including the Elber, Tomkins, and Solomon-Skelton models, which additionally assess crack growth rates in relation to cyclic loading amplitude. A finite element numerical model is created to evaluate fracture propagation in a cracked tube under combined thermal and mechanical loading in real-world conditions. The research investigates the effects of temperature (300°C and 550°C), mechanical load, and the interplay between these factors on the kinetics of semi-elliptical crack propagation. The numerical results are subsequently checked with experimental data from the literature to verify the accuracy of the predictions. This comparison underscores the advantages and drawbacks of standard analytical models, especially concerning the impact of thermomechanical effects on the fatigue life of cracked structures.*

Keywords *- Damage, J-integral, Paris' law, Stress Intensity Factor (SIF), Material behavior law, Stainless steel, 316L, Heat exchanger.*

1. Introduction

The study of crack-induced damage in heat exchanger components is a major challenge in ensuring the structural integrity and safety of industrial facilities exposed to severe thermomechanical loading conditions. This complex phenomenon, involving crack initiation and propagation under cyclic loading, necessitates the development of robust predictive models. The present study aims to provide an in-depth analysis of different modeling approaches for thermal fatigue damage. First, fundamental fracture mechanics concepts are reviewed, focusing on stress field characterization at the crack tip in both linear elastic and elastoplastic domains using K-parameters and the J-integral [1]. The study then describes various fatigue crack propagation regimes, followed by an evaluation of two major families of fatigue life prediction models: global approaches based on K and J, such as the Paris, Elber, and Tomkins models [2-4]. Industrial facilities, particularly tubular heat exchangers, operate under severe service conditions that can induce various structural damage mechanisms. These components, widely used in the petrochemical, energy, and aerospace industries, must withstand complex loading conditions, combining fluctuating thermal and mechanical stresses. The repeated exposure to heating and cooling cycles, coupled with operational mechanical loads, promotes the emergence of structural defects, particularly in the form of cracks. These phenomena represent a critical challenge for the reliability and safety of industrial systems, as crack propagation can lead to catastrophic failures, resulting in high maintenance costs and increased operational risks. Among the damage mechanisms affecting heat exchangers, thermomechanical fatigue is particularly concerning. This phenomenon arises from the interaction between thermal stresses generated by high-temperature gradients and mechanical stresses induced by external loads and operating conditions. Under cyclic loading, cracks may initiate and propagate progressively, compromising the material's structural integrity [5]. Crack propagation is typically analyzed using fracture mechanics principles, where parameters such as the stress intensity Factor (K) and the J-integral characterize crack front evolution and define fracture criteria. A thorough understanding of these mechanisms is

This is an open access article under the CC BY-NC-ND license (http://creativecommons.org/licenses/by-nc-nd/4.0/)

essential for anticipating structural degradation and optimizing both design and maintenance strategies [6].

In this context, the present study aims to numerically model crack propagation under thermomechanical loading in a tubular heat exchanger. A finite element approach is adopted to analyze the evolution of a semi-elliptical crack under real operating conditions. The objective is to evaluate the residual fatigue life of the cracked component using analytical models derived from fracture mechanics, particularly Paris' law and its variants. The numerical results will be contrasted with experimental data from the literature to ascertain the accuracy of the predictions and identify key parameters influencing crack growth kinetics. This approach contributes to enhancing predictive maintenance strategies and optimizing the service life of structures subjected to extreme loading conditions.

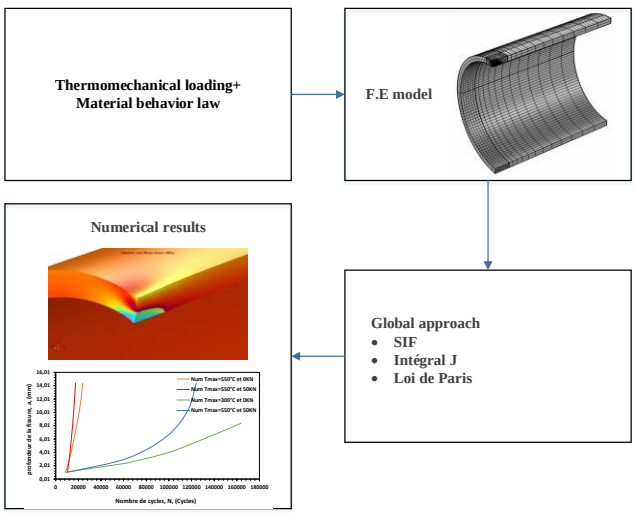

Fig. 1 E.F. modelling of a thermal fatigue crack

2. Literature Review on Fatigue Life Prediction Models Considering Crack Presence

To estimate the fatigue life during crack propagation, it is essential to have a propagation law capable of predicting defect growth kinetics, which is an expression of the applied load amplitude and all pertinent parameters. This section primarily focuses on forming long crack propagation in Stage II. The factors affecting crack propagation are generally classified into two categories:

Intrinsic factors: including cyclic properties, microstructural parameters, yield strength, and Young's modulus.

Extrinsic factors include temperature variation, the stress Ratio (R), and environmental conditions.

Given the multitude of influencing factors, often accompanied by complex interactions, it is hardly surprising that no one theory can precisely forecast crack propagation kinetics under various loading conditions, even for a specific material. Consequently, a propagation law must establish an association between the crack propagation rate and various characteristics, articulated as follows:

$$\frac{da}{dN} = f\left(\Delta K, R, m\ldots\right) \tag{1}$$

Where the variables m represent metallurgical parameters affecting crack propagation, such as cyclic behavior and grain size.

This section presents numerous models from the scientific literature that address high-loading conditions when flexibility at the fracture tip is not restricted to a localized area. These models seek to formulate propagation laws that dictate the crack growth rate based on cyclic loading parameters and material characteristics. Their advancement is essential for accurately forecasting the remaining lifespan of fractured structures under extreme loading conditions, especially those that experience considerable plastic deformation at the crack tip. An overview of the literature on models for predicting fatigue life when a crack occurs.

2.1. Paris Model

This model assumes an initial crack of a given length, followed by a computation derived from Linear Elastic Fracture Mechanics (LEFM) [2, 6]. The aim is to ascertain the number of load cycles necessary for the fracture to attain a critical length utilizing a propagation law.

The critical crack length is primarily influenced by the material's behavior, particularly its fracture toughness. This parameter defines the maximum crack length that a given thickness specimen can reach before catastrophic propagation occurs, leading to complete failure of the sample. The lower the material's notch sensitivity, the longer its total lifespan, including both the initiation and propagation phases.

By integrating the Paris model from Equation (2):

$$N = \int_{a_i}^{a_f} \frac{da}{C(\Delta K)^m} \tag{2}$$

Where a_i and a_f denote the beginning and terminal crack lengths, respectively, the critical final length is determined by the brittle fracture criterion, which is reached when the maximum stress intensity factor *Kmax* equals the material's fracture toughness *Kic*, i.e., when the condition *Kmax=Kic* is satisfied. Beyond this critical length *af*, unstable crack propagation leads to total structural failure. Numerous studies have confirmed the applicability of this law for predicting crack growth under cyclic thermal or mechanical loading [7].

2.2. Elber Model

Elber's research highlighted the importance of considering crack closure phenomena when describing fatigue crack growth behavior. This phenomenon occurs when the crack faces touch during the unloading phase of the loading cycle, effectively reducing the driving force for crack propagation. The segment of the loading cycle in which the crack remains closed is deemed inactive for propagation. To account for this effect, Elber proposed defining an effective stress intensity range expressed as *ΔKeff=Kmax–Kop*. This leads to a modification of Paris' equation, incorporating the crack closure effect:

$$\frac{da}{dN} = C\left(\Delta K_{eff}\right)^m \tag{3}$$

By integrating Equation (4), the number of cycles to failure can be determined as:

$$N = \int_{a_i}^{af} \frac{da}{C(\Delta K_{eff})^m} \tag{4}$$

2.3. Solomon and Skelton Model

Several studies have been conducted to estimate low-cycle fatigue life. However, crack growth rate criteria in this fatigue regime remain relatively underdeveloped. Indirect experimental measurements are often used to determine crack growth rates under low-cycle fatigue conditions. Solomon and Skelton's pioneering work revealed that the crack propagation rate is contingent upon the applied load under generalized plasticity conditions [8, 9]. This dependence is described by a power law, generally formulated as:

$$\frac{da}{dN} = A.\alpha.\left(\Delta\varepsilon_p\right) \tag{5}$$

Where A is a material constant, α is an exponent characterizing the crack growth criterion, and a represents the crack length [10]. Establishing such propagation laws is essential for predicting crack initiation and growth under severe cyclic loading conditions encountered in various industrial sectors.

By integrating Equation (6):

$$N = \int_{a_i}^{af} \frac{da}{A.\alpha.\left(\Delta\varepsilon_p\right)} \tag{6}$$

2.4. Tomkins Model

A low-cycle fatigue crack propagation model was proposed by Tomkins [4], drawing inspiration from the early work of Bilby on dislocation theory [11]. This model establishes a correlation for ductile materials, between the displacement at the fracture tip and the increment in crack length per cycle, consistent with the experimental findings of Laird [12]. According to this model, fatigue crack propagation is attributed to the activation of shear dislocations along planes oriented at ±45° relative to the mechanical loading direction at the crack tip [13]. This dislocation movement creates a plastic deformation zone near the fracture tip. The crack growth rate is then formulated as a function of parameters such as plastic strain amplitude, applied stress, and a representative measure of shear stress distribution along slip bands:

$$\frac{da}{dN} = \frac{\pi^2}{32}\frac{\Delta\varepsilon_p \Delta\sigma^2}{\left(2\bar{S}\right)^2} a\left[1 + \frac{\pi^2}{32}\left(\frac{\Delta\sigma}{2\bar{S}}\right)^2\right] \tag{7}$$

In this model, the parameter $\bar{S}$ is particularly significant. It represents a measure of plastic shear stress near the fracture tip, indicating the intensity of plastic deformation regions induced by cyclic loading. Accurately determining $\bar{S}$ is therefore essential to properly quantify fatigue crack growth rates using this model.

2.5. J-Integral-Based Model

The pioneering work of Rice [14], building on the concepts developed by Eshelby [15], led to the introduction of the J-integral, also known as the contour integral J. Considering a crack within a medium and a closed contour Γ surrounding its front, the J-integral represents a fundamental quantity that characterizes the stress and strain fields at the point of the crack, which dictate the conditions for crack growth, as delineated in Equation (8).

Many researchers have investigated the application of the J-integral as a setting for crack propagation, particularly in fatigue conditions involving generalized plasticity at the point of the crack. In particular, Skelton [8] and colleagues proposed a formulation for Fatigue fracture propagation rate determined by strain energy distribution at the fracture point, expressed as:

$$\frac{da}{dN} = \frac{1}{1+\beta}\left(\frac{\Delta J}{I_\beta W_c}\right) f(\beta) \tag{8}$$

In this model, the crack growth rate follows a power law involving ΔJ, the cyclic variation of the energy release rate at the fracture point. The parameters $I\beta$ and Wc are material-dependent constants, notably influenced by nonlinear hardening behavior, characterized by the exponent β in a power law relating plastic strain εp to stress σ.

This energy-based approach allows the consideration of generalized plasticity effects, which control crack growth kinetics under severe cyclic loading conditions. A formulation analogous to Paris' law for fatigue crack propagation was proposed by Dowling [16]. This phenomenological approach, inspired by the classical Paris model, expresses crack growth rate regarding the cyclical fluctuation of an energy-based measure indicative of plastic strain fields near the crack apex:

$$\frac{da}{dN} = C(\Delta J)^m \tag{9}$$

3. Numerical Modeling

3.1. Methodology Description

This section presents the numerical representation of the growth of fractures via the use of Finite Elements (FEM). Figure 2 illustrates a methodology based on two complementary approaches: the global approach, which relies on the law of Paris utilizing the stress intensity factor, and the Continuum Damage Mechanics (CDM) approach, based on the Lemaitre-Chaboche model.

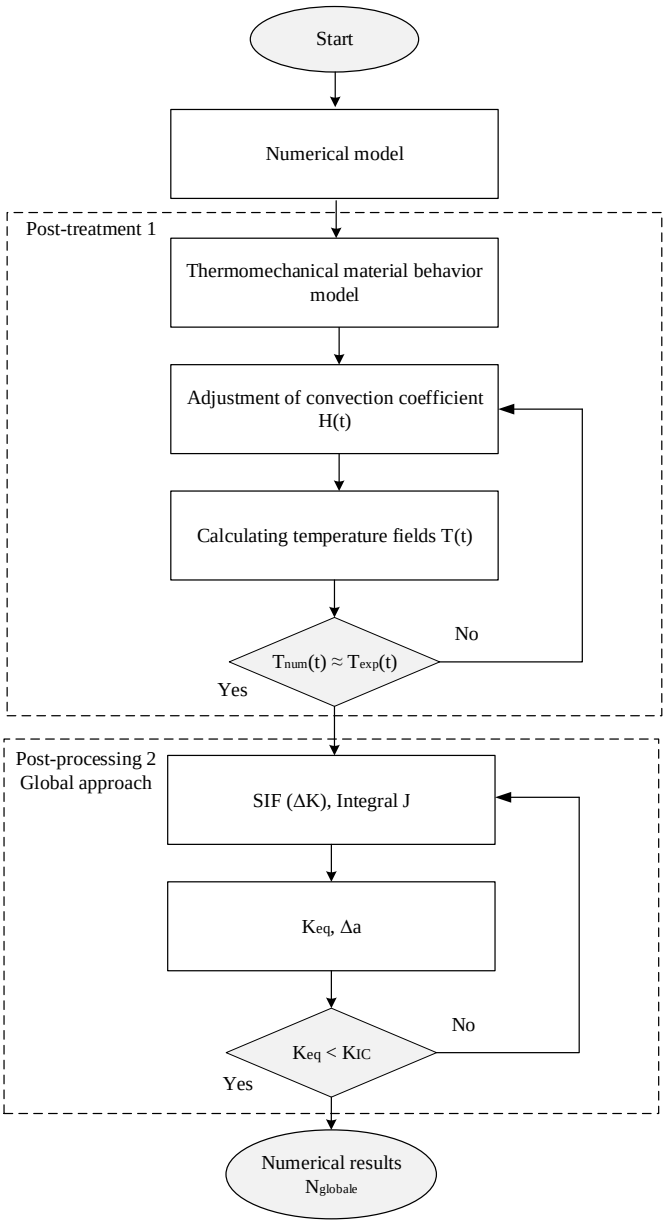

Fig. 2 Numerical approach to crack propagation using the E.F. method

The methodology begins with a 3D cracked tube containing a semi-elliptical longitudinal crack and comprises three separate items post-processing steps. The initial phase, iterative in nature, incorporates thermomechanical modeling, convection coefficient adjustment, and thermal field calculations. This process continues until convergence is achieved utilizing the empirical data previously reported in the literature [1].

The second post-processing phase termed the global method, relies on the assessment of *Keq* and *da/dN*. This iterative process continues until Keq reaches the fracture Toughness (K_{IC}), at this point, Paris' law is applied to determine the quantity of cycles as an estimate of fracture depth. It should be noted that this global approach utilizes complementary experimental data for 316L stainless steel, particularly the Paris law Coefficients (C) and the Exponent (n) for maximum temperatures of 550°C and 300°C, as presented in Table 3. This methodology integrates advanced concepts of fracture mechanics and damage modeling while relying on the material properties of 316L stainless steel, as provided in Tables 1-3. This rigorous approach enables accurate and multidimensional numerical modeling of crack propagation in metallic materials subjected to thermomechanical loading conditions.

Table 1. Thermal characteristics of 316L [17]

$T(°C)$	20	300	500	700
$\alpha(\mu m / °C)$	15.54	18.92	20.36	21.28
$\lambda(W / m.K)$	14.5	18	20	23
$C(J / Kg.K)$	480	550	580	600
$\rho(Kg/ m^3)$	8000	7870	7780	7680

Table 2. Elastic mechanical characteristics of 316L [17]

$T(°C)$	20	300	500	700
υ	0.3	0.3	0.3	0.3
$E(GPa)$	195	154	145	139
$R_e(MPa)$	231	149	135	130
$R_m(MPa)$	554	439	410	393

Table 3. 316L material data for Paris law for both temperatures 300°C and 550°C [1]

$T(°C)$	300	550
C	2,7E-10	1.8E-08
n	3,89	3,2
$K_{IC}(MPa\sqrt{m})$	100	-

3.2. Meshing

For the meshing of a tube containing a semi-elliptical longitudinal crack, we first generated a free triangular mesh on the outer boundary. The element size was then configured by defining a fixed aspect ratio (a/2c) and creating a bead along the crack front. Subsequently, a block containing the bead and the surrounding crack zone was meshed. These steps allow for a refined mesh near the region of interest (typically a crack or singularity) while maintaining a smooth transition to larger elements in less critical regions, thereby optimizing the analysis's accuracy and computational efficiency.

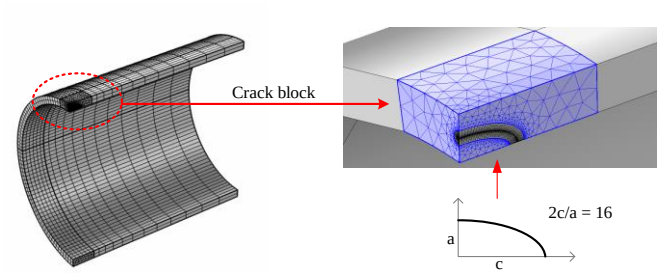

Fig. 3 Typical Finite Element (FE) mesh for 3D cracked tube analysis with a circumferential semi-elliptical crack and details of the crack tip meshing

3.3. Loading and Boundary Conditions

In the 3D finite element model, two types of boundary conditions were applied.

Thermal boundary conditions (Figure 4) were defined as follows:

Thermal Condition 1: Applied to the outer wall of the tube, where two maximum temperatures were considered: 550°C and 300°C.

Thermal Condition 2: Applied to the inner wall, where water flows at a specific temperature of 25°C with a thermal conductivity coefficient of 4000 W/m².K.

Mechanical boundary conditions (Figure 5): A tensile force was applied at one end of the tube along the z-axis.

Symmetry boundary conditions were imposed:

The opposite end of the tube was fixed, with zero displacements along the z-axis (Uz = 0) and zero rotation constraints (Rx = Ry = 0). The lateral surface was also subjected to displacement constraints (Ux, Ry, Rz). This finite element modeling approach, combining complex thermal and mechanical boundary conditions, aims to replicate the conditions of JRC tests, enabling a detailed analysis of the tube's behavior under various thermomechanical loading conditions.

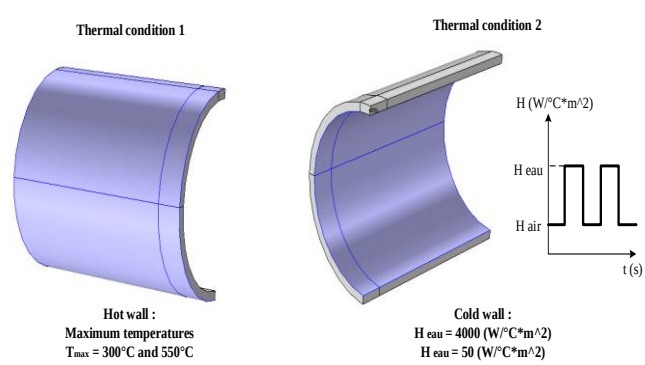

Fig. 4 Thermal boundary conditions for the 3D finite element model

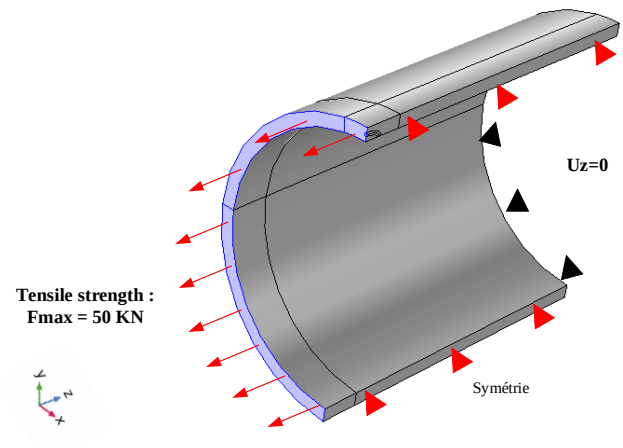

Fig. 5 Mechanical boundary conditions for the 3D finite element model

4. Results and Discussion

The numerical analysis of Von Mises stresses within the tube reveals a stress concentration at the crack front. Figure 6 clearly illustrates this stress concentration near the crack tip, where the maximum values reach 250 MPa. This stress singularity, characteristic of fracture mechanics problems, arises due to the geometric discontinuity introduced by the crack. It is important to note that the magnitude of these stresses depends on several factors, including crack geometry (size, orientation), applied loading conditions, and the material's thermal and mechanical properties. These numerical results are consistent with theoretical fracture mechanics predictions, highlighting the necessity of accounting for these effects when evaluating the structural resistance of components containing defects.

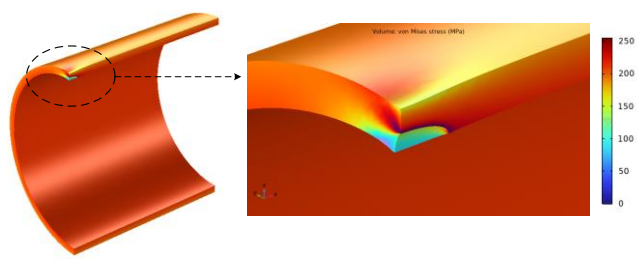

Fig. 6 Numerical representation of Von Mises stress distribution within the tube and at the crack front

Figures 7 to 10 present the numerical results of the progression of fracture depth as a function of cycle count, starting from an initial depth of 1 mm for two different temperatures (550°C and 300°C), with and without axial loading. These Results are juxtaposed with empirical data. provided by Paffumi [1]. The computations demonstrate strong concordance with data from experiments for shallow cracks. However, Paris' law tends to overestimate crack propagation in the case of deep cracks, which can be attributed about the existence or growth of the plastic zone adjacent to the fracture front.

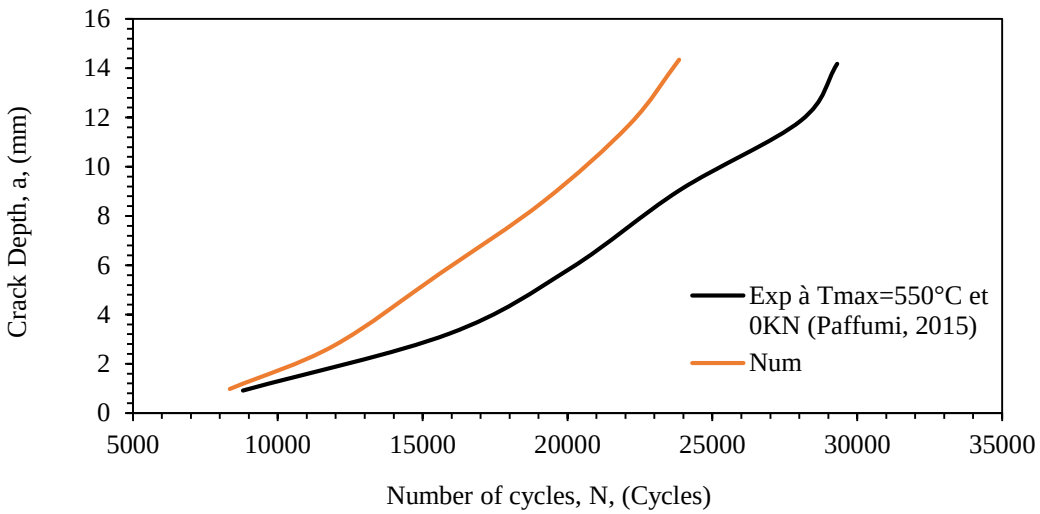

Fig. 7 Calculated crack depth as a function of cycle count (a_0 = 1 mm, N = 10,000) at Tmax = 550°C and F = 0 kN

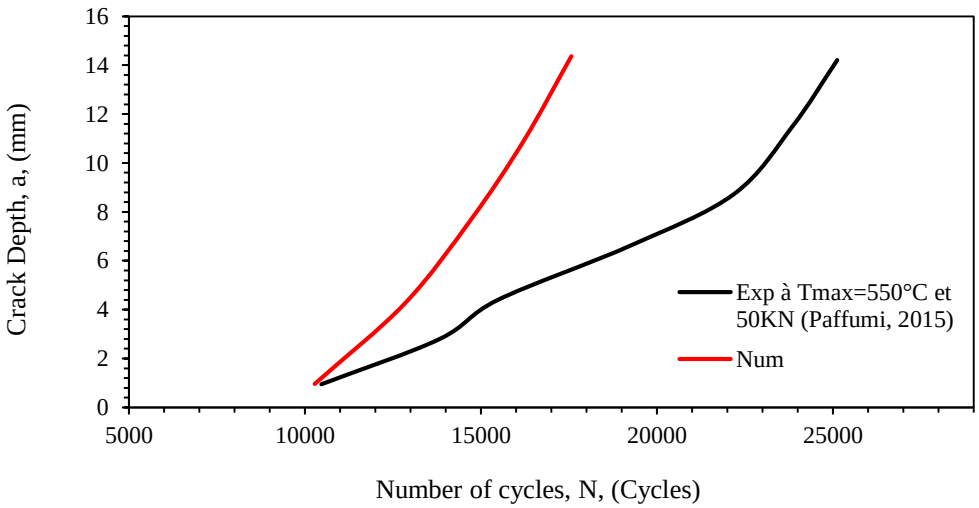

Fig. 8 Calculated crack depth as a function of cycle count (a_0 = 1 mm, N = 10,000) at Tmax = 550°C and F = 50 kN

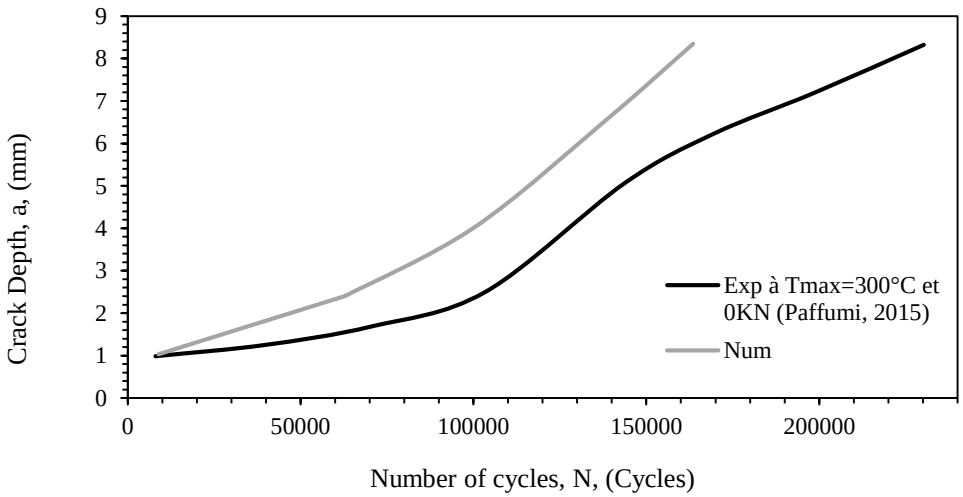

Fig. 9 Calculated crack depth as a function of cycle count (a_0 = 1 mm, N = 10,000) at Tmax = 300°C and F = 0 kN

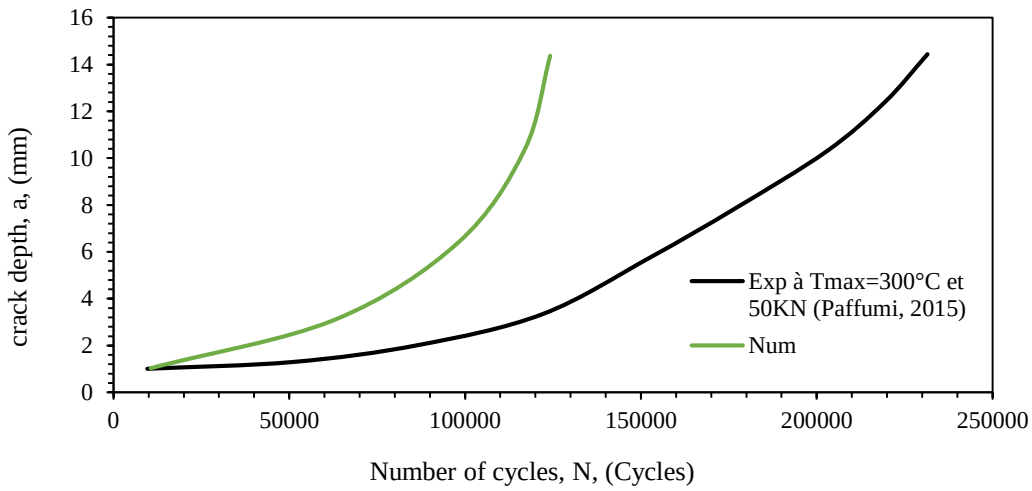

Fig. 10 Calculated crack depth as a function of cycle count (a_0 = 1 mm, N = 10,000) at Tmax = 300°C and F = 50 kN

Furthermore, axial loading only has a marginal influence on axial crack propagation, which is consistent with the fact that the stress level range and meaning of stress stay virtually unchanged due to stress release.

5. Conclusion

This study analyzed the damage mechanisms affecting tubular heat exchangers under thermomechanical loading, focusing on fatigue crack propagation. The adopted approach is based on fracture mechanics, specifically global models using the K and J parameters, which allow for the evaluation of crack growth rates as a function of loading cycles. A finite element numerical simulation was conducted to model the evolution of a semi-elliptical crack in a tube subjected to realistic thermomechanical conditions. The obtained results were compared with available experimental data, showing good agreement for shallow cracks. However, discrepancies were observed for deeper cracks, highlighting the limitations of classical analytical models in the presence of significant plastic deformations. The perspectives of this research open several avenues for improvement and further investigation. First, integrating advanced models incorporating generalized plasticity effects at the crack tip would enhance the accuracy of residual life predictions for structural components. Additionally, investigating the interaction between multiple cracks and their coalescence under cyclic loading could provide a deeper understanding of in-service degradation mechanisms. Finally, more extensive experimental validation, particularly through thermomechanical fatigue tests on representative specimens, would strengthen the robustness of the proposed models and their applicability to real industrial conditions.

Collectively, these advancements would contribute to the improvement of predictive maintenance strategies and the optimization of heat exchanger design, ensuring greater reliability of industrial infrastructures operating under severe constraints.

Acknowledgments

It is with deep appreciation that the author and co-authors would like to express their gratitude to their friends at the Faculty of Sciences and Techniques in Fez, Morocco. The authors declare no competing interests.

References

[1] Elena Paffumi, Karl-Fredrik Nilsson, and Zoltan Szaraz, "Experimental and Numerical Assessment of Thermal Fatigue in 316 Austenitic Steel Pipes," *Engineering Failure Analysis*, vol. 47, pp. 312-327, 2015. [CrossRef] [Google Scholar] [Publisher Link]

[2] P. Paris, "A Rational Analytic Theory of Fatigue," *Trends Engineering*, vol. 13, pp. 9-14, 1961. [Google Scholar] [Publisher Link]

[3] Wolf Elber, "Fatigue Crack Closure under Cyclic Tension," *Engineering Fracture Mechanics*, vol. 2, no. 1, pp. 37-45, 1970. [CrossRef] [Google Scholar] [Publisher Link]

[4] B. Tomkins, "Fatigue Crack Propagation-An Analysis," *The Philosophical Magazine: A Journal of Theoretical Experimental and Applied Physics*, vol. 18, no. 155, pp. 1041-1066, 1968. [CrossRef] [Google Scholar] [Publisher Link]

[5] Jaehoon Sim, Hyoin Lee, and Ji Hwan Jeong, "Optimal Design of Variable-Path Heat Exchanger for Energy Efficiency Improvement of Air-Source Heat Pump System," *Applied Energy*, vol. 290, 2021. [CrossRef] [Google Scholar] [Publisher Link]

[6] P. Paris, and F. Erdogan "A Critical Analysis of Crack Propagation Laws," *Journal of Basic Engineering*, vol. 85, no. 4, pp. 528-533, 1963. [CrossRef] [Google Scholar] [Publisher Link]

[7] H. Huthmann, and C. Picker, "*Behaviour of Short Fatique Cracks in Austenitic Stainless Steels: Literature Review*," Final Report, Office for Official Publications of the European Communities, 1995. [Google Scholar]

[8] R.P. Skelton, "High Strain Fatigue of 20Cr/25Ni/Nb Steel at 1025 K Part III: Crack Propagation," *Materials Science and Engineering*, vol. 19, no. 2, pp. 193-200, 1975. [CrossRef] [Google Scholar] [Publisher Link]

[9] HD Solomon, "Low Cycle Fatigue Crack Propagation in 1018 Steel," *Journal of Materials*, vol. 7, pp. 299-306, 1972. [Google Scholar]

[10] C. Bathias, and A. Pineau, *Fatigue of Materials and Structures: Application to Design and Damage*, ISTE/Hermes Science Publishing, pp. 1-512, 2008. [Google Scholar] [Publisher Link]

[11] Bruce Alexander Bilby et al., "Plastic Yielding from Sharp Notches, *Proceedings of the Royal Society of London Series A. Mathematical and Physical Sciences*, vol. 279, no. 1376, pp. 1-9, 1964. [CrossRef] [Google Scholar] [Publisher Link]

[12] Campbell Laird, *The Influence of Metallurgical Structure on the Mechanisms of Fatigue Crack Propagation*, ASTM International, pp. 1-50, 1967. [CrossRef] [Google Scholar] [Publisher Link]

[13] R.M.N. Pelloux, "Mechanisms of Formation of Ductile Fatigue Striations," *American Society for Metals Transactions*, vol. 62, pp. 281-285, 1969. [Google Scholar]

[14] J.R. Rice, "A Path Independent Integral and the Approximate Analysis of Strain Concentration by Notches and Cracks," *Journal of Applied Mechanics*, vol. 35, no. 2, pp. 379-386, 1968. [CrossRef] [Google Scholar] [Publisher Link]

[15] J.D. Eshelby, "The Elastic Energy-Momentum Tensor," *Journal of Elasticity*, vol. 5, pp. 321-335, 1975. [CrossRef] [Google Scholar] [Publisher Link]

[16] N.E. Dowling, and J. A. Begley, *Fatigue Crack Growth during Gross Plasticity and the J-Integral*, Mechanics of Crack Growth, pp. 1-22, 1976. [CrossRef] [Google Scholar] [Publisher Link]

[17] E. Paffumi et al., "Crack Initiation, Propagation, and Arrest in 316L Model Pipe Components under Thermal Fatigue," *Journal of ASTM International*, vol. 2, no. 5, pp. 1-18, 2005. [CrossRef] [Google Scholar] [Publisher Link]