SSRG International Journal of Mechanical Engineering
ISSN: 2348-8360/ https://doi.org/10.14445/23488360/IJME-V12I4P101

Volume 12 Issue 4, 1-10, April 2025
© 2025 Seventh Sense Research Group®

Original Article

Elastic Strength in Thick-Walled Cylinders with Radial and Offset Oblique Cross Bores

PK Nziu

Department of Mechanical Engineering, Walter Sisulu University, East London, South Africa.

Corresponding Author : pnziu@yahoo.com

Received: 01 February 2025 Revised: 03 March 2025 Accepted: 02 April 2025 Published: 30 April 2025

Abstract *- This research aims to investigate the effects of radial and offset oblique cross bores on elastic stress concentration factors in thick-walled cylinders with thickness ratios between 1.4 and 3.0 using the Finite Element Analysis (FEA) method. This research was necessitated by using a high magnitude of safety factors ranging from 2 to 20 in the design and construction of high-pressure vessels, resulting in increased use of materials, low operating pressures and efficiencies. A total of 140 finite element analysis models were created and analyzed using Abaqus software. Generally, it was observed that most of the studied cylinders had their lowest SCF magnitudes at oblique angles of 0° and highest at 60°. The lowest and highest SCF values were noted at K = 1.5 and 3.0, with magnitudes of 1.511 and 1.98 for Tresca and 1.596 and 2.223 for Von Mises, respectively. The location with the lowest SCF occurred when offset cross bores were positioned radially in a non-inclined position. The difference between Tresca and Von Mises elastic SCF magnitudes ranged from 5.63% to 13.1%. Meanwhile, the yielding pressure increased with an increase in thickness ratio ranging from 39.24 to 56.12 and 41.86 to 57.69 for Tresca and Von Mises theories, respectively.*

Keywords *- Cross bores, Elastic stresses, Stress concentration factor, Thick cylinders.*

1. Introduction

Stress Concentration Factors (SCF) are used in the design of engineering components whenever there is a presence of any discontinuity in geometry, metallurgy and loading. These discontinuities include holes, cavities, notches, fillers, grooves and cracks. Other categories are inclusion, defects, concentrated loads, discontinuously distributed loads, and body forces [1].

SCF is critical in the life of a component as it predicts various types of failures, such as fracture, fatigue, and local yielding. For instance, fatigue failures are presumed to originate in areas of high-stress concentration [2]. The remedy to reduce SCF is for these discontinuities to be located in areas where nominal stresses are as low as possible.

SCFs are calculated in the following three ways [3], with the last two being used in elastic strength problems, particularly in analyses of the effects of both single and multi-axial loadings, which is within the scope of this paper.

High-pressure vessels store energy in large amounts in power plants, process and chemical industries and other fluid supply industries. Holes, also referred to as cross bores or cross holes, are drilled on the cylinder's surface to provide installation of essential accessories such as inspection manholes, safety valves, pressure and temperature gauges, gas inlets and outlets, etc. [4]. Thus, the presence of cross-bores is inevitable in the design of pressure vessels.

Cross bores act as geometric discontinuities, thus altering the uniform distribution of stresses along the thickness of the plain cylinder. This alteration of stress distribution creates regions of high-stress concentration [2].

The severity of stress concentration depends on the geometric configuration parameters of the cross bore, such as the size, shape (aspect ratio), location (radial or offset), and obliquity (skewness) [5].

$$\mathrm{SCF}_{\mathrm{Hoop}} = \frac{\text{localised critical hoop stresses in a cross bored cylinder}}{\text{Corresponding hoop stresses in an undrilled cylinder}} \tag{1}$$

$$\mathrm{SCF}_{\mathrm{Tresca}} = \frac{\text{Localised critical Tresca stresses in a cross bored cylinder}}{\text{Corresponding Tresca stresses in an undrilled cylinder}} \tag{2}$$

$$\mathrm{SCF}_{\mathrm{Vonmises}} = \frac{\text{Localised critical Von mises stresses in a crossbored cylinder}}{\text{Corresponding Von mises stresses in an undrilled cylinder}} \tag{3}$$

This is an open access article under the CC BY-NC-ND license (http://creativecommons.org/licenses/by-nc-nd/4.0/)

The configuration and the choice of these inevitable cross-bore design parameters greatly impact the design of pressure vessels to prevent failures. Failures of high-pressure vessels are approximated to be 24.4% of total industrial accidents [2]. These failures have resulted in loss of human life, damage to property, environmental pollution, and, in some instances, led to the emergency evacuation of residents living in the surrounding areas. Hence, the need for safe designs cannot be overemphasized.

Design and construction of pressure vessels are done using Section 1 and Division VIII of the American Society of Mechanical Engineering (ASME) boiler and pressure vessel design codes. These codes tabulate wall thicknesses and their corresponding nominal stresses below safe allowable or working stresses [6]. These codes are used in combination with design rules and safety factors, particularly in regions with higher localized stresses due to the presence of geometric discontinuities. Some studies have also reported using empirical formulae to design pressure vessels.

Despite these pressure vessel design codes giving a quick design procedure, they do not consider stress concentration factors, which is the case in cross-bored pressure vessels [7]. In addition, developing these design codes does not give a detailed stress analysis. This practice has led to high safety factors, which results in unnecessary material wastage, low operating pressure and inefficiencies [2].

Numerous studies have investigated the effects of cross-bore geometry configuration on the hoop and elastic stress concentration factors in cross-bored high-pressure vessels. These analyses established the effects of different cross-bore configuration parameters such as cross-bore size, shape, location, and obliquity.

Masu [8] investigated the effect of cross-bore geometry on the strength of pressure vessels using both experimental and numerical methods. The study compared the effects of plain, chamfered, and radiused cross bores on the fatigue strength at both radial and offset positions. The author reported a reduction of hoop stress concentration factor up to 42% when a plain cross bore was placed in an offset position.

Kihiu [7] carried out a study on hoop stress characterization in cross-bored pressurized thick-walled cylinders using a numerical method. The study investigated the effects of introducing chamfers and radiused entry in plain cross bores on stress concentration. The author reported that the radiused entry had lower SCF than chamfers.

Using finite element analysis, Makulsawatudom et al. [8] studied elastic stress concentration at cross holes in thick cylindrical vessels under internal pressure. The authors investigated the effects of plain, blended and chamfered circular and elliptical-shaped cross bores at both radial and offset positions. The study reported peak stresses for elliptical radial cross bore were lower than those of circular cross bore.

Comlekci et al. [3] studied elastic stress concentration at radial circular cross-holes in pressurized thick wall cylinders with thickness ratios ranging from 1.4 to 2.5 using finite element analysis. They reported a minimum elastic SCF between the cross-bore size ratio of 0.1 and 0.2.

Adenya [9] studied hoop stress concentration factors in high-pressure vessels on different aspect ratios of elliptical cross bores using a numerical method. The study reported a reducing effect on hoop SCF when the major axis of an elliptical-shaped cross bore was perpendicular to that of the main cylinder.

Nihous et al. [10] studied radial oblique cross-bores oriented at five different angles: 0°, 15°, 30°, 45° and 60°, using a numerical method for various cross-bore sizes. The orientation of these cross-bores was similar to those illustrated in Figure 2. The study observed that the SCF magnitude increased significantly as oblique angles increased from 0° to 60°.

Nziu [11] optimized the geometrical configuration parameters of a cross bore in pressurized high-pressure vessels using both analytical and numerical methods. The study reported the lowest hoop SCF at the radial circular cross bore, offset circular cross bore, and radial elliptical-shaped cross bore as 2.84, 2.31 and 1.73, respectively.

Using finite element analysis, Gimeno et al. [12] studied hoop stress concentration in pressurized vessels with circular cross bores. They analyzed the effects of thickness ratio, cross-bore size, and shape and developed statistical regression equations to predict hoop SCF on the aforementioned geometries.

Later studies by Nziu and Masu [13] analyzed the effects of cross-bore size, shape, and location on elastic strength concentration factors. However, the authors did not study the effects of cross-bore obliquity on elastic strength despite it being one of the major parameters of a cross-bore.

For instance, a study by Cole [14] reported a possibility of improvement in pressure carrying capacity of up to 48% whenever circular oblique cross bores are placed more optimally than those at radial positions. Hence, the a need for further study to determine obliquity effects.

Therefore, the objective of this study is to investigate the effects of cross-bore obliquity in radial and offset positions on elastic stress concentration factor in thick cylinders using finite element analysis.

2. Materials and Methods

The cylinder thickness ratios and configuration of the cross bore studied in this work are tabulated in Table 1. The selection of these parameters was in line with previous studies by Nihous et al. [10] and Nziu [11] that had been based on the commonly used engineering parameters in the industry. It is worth noting that oblique angles α exceeding 60^0 could not be modeled due to the persistent distortion of finite elements. The same observation has also been cited by Nihous et al. [10]. The design parameters of the cross-bore configuration for the location and obliquity are illustrated in Figures 1 and 2, respectively.

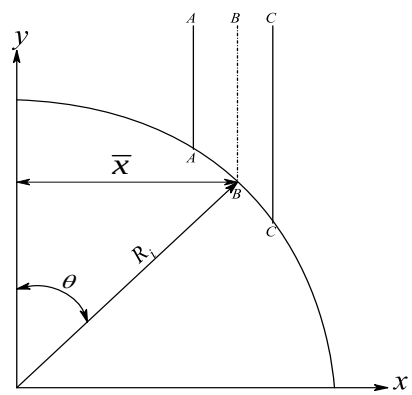

Fig. 1 Configuration of an offset cross bore

Where:

R_i is the internal radius of the main bore

$\bar{x}$ is the offset distance

Table 1. Cylinder thickness ratio and cross-bore configuration

Cylinder thickness ratio K	1.4, 1.5, 1.75, 2.0, 2.25, 2.5 and 3.0
Cylinder bore diameter	0.05 m
Cross bore shape	Circular
Cross-bore size ratio	0.1
Cross-bore offset ratio $\bar{x}/R_i$	0, 0.24, 0.48 and 0.685
Cross oblique angle α	0^0, 15^0, 30^0, 45^0 and 60^0

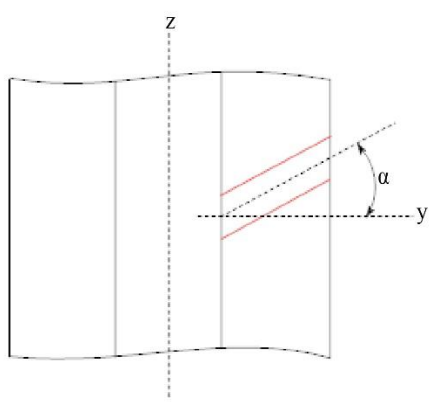

Fig. 2 Configuration of an oblique cross-bore

Where α is the oblique angle

2.1. Finite Element Modelling

Part models totaling 140 were developed using a commercial software program, Abaqus. Due to the symmetrical structure and the need to reduce both the computer space and processing time, only an eighth of the cylinders were created and analyzed, as shown in Figures 3 and 4.

2.1.1. Material Property

The properties of materials used in this work are tabulated in Table 2.

Table 2. Material property

Poisson ratio	0.29
Yield Strength	250 MPa
Internal Pressure	1 MPa
Young Modulus of elasticity	190 GPa

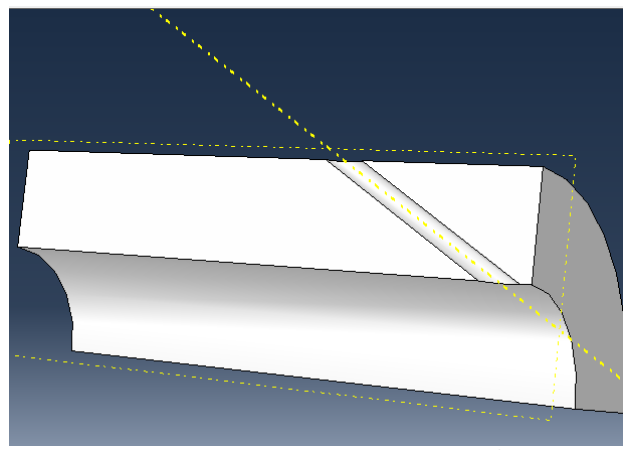

Fig. 3 Radial oblique cross-bored part profile

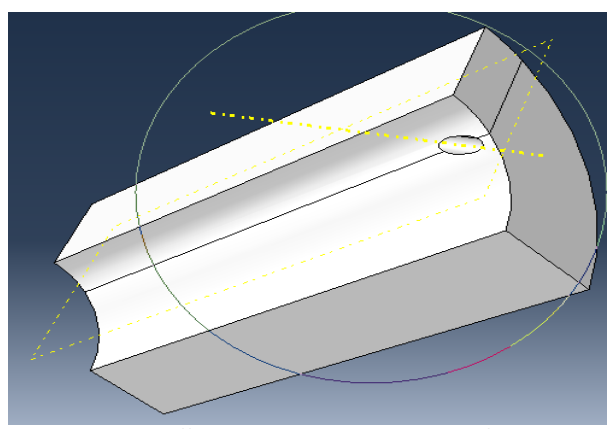

Fig. 4 Offset oblique cross-bored part profile

2.1.2. Application of Load and Boundary Conditions

Internal pressure was applied to both the main bore and the cross bore. The symmetrical boundary conditions were applied at the cut sections of the X, Y and Z axes to prevent any rigid movement or rotation during the simulation.

Closed-end effects were simulated by applying an end cap constraint in the Z axis.

2.1.3. Meshing of the Elements

The meshing of elements was done using both P and H element techniques. The P element technique entailed meshing the model using second-order tetrahedral elements with 10-sided nodes since they can effectively capture the generated principal stresses. Whereas the H element modeling technique was achieved by partitioning the model into smaller sections to allow refining of the mesh in the regions around the cross, bore, thus increasing the mesh density. Increased mesh density allows the capturing of the localized stresses accurately. A sample of radial and offset cross-bored meshed profiles created is shown in Figures 5 and 6.

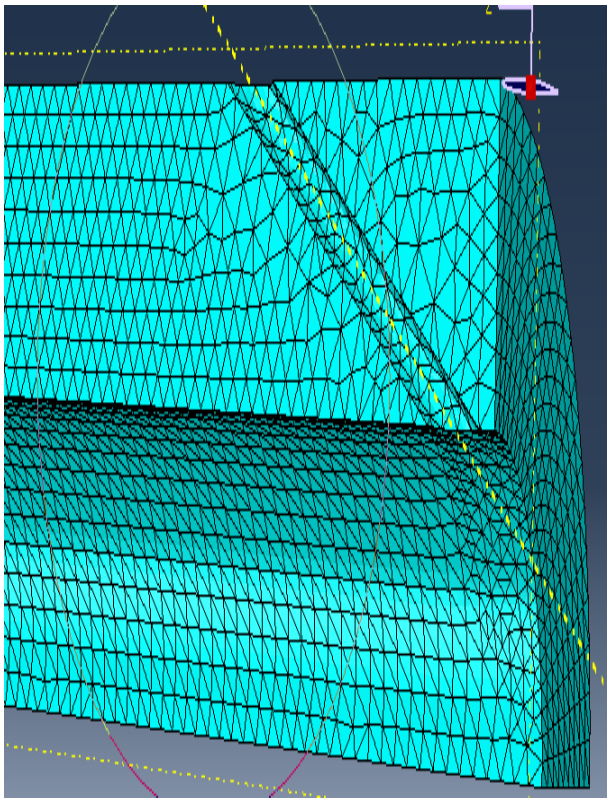

Fig. 5 Radial oblique cross-bored meshed profile

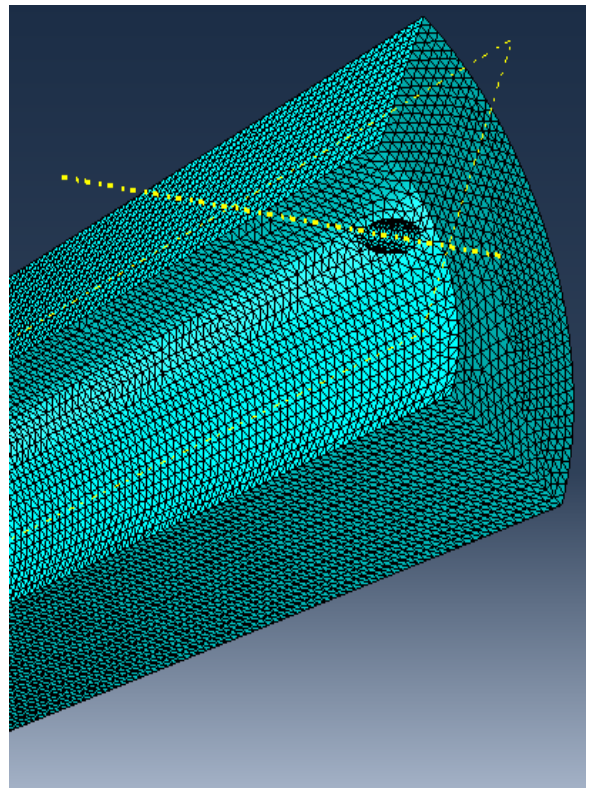

Fig. 6 Offset oblique cross-bored meshed profile

2.1.4. Results Visualization

The maximum Tresca and Von Mises magnitudes were read at 75% average in the visualization mode. Whereas the corresponding Tresca and Von Mises SCFs were calculated using Equations (2) and (3), respectively.

2.1.5. Validation of the Model

Results generated by the FEA modeling process are prone to errors associated with domain approximation, element interpolation, errors due to numerical integration, and computer round-off. Hence, the need for validation. The validation of the generated FEA results was done analytically in accordance with the Saint Venant principle.

This validation was achieved by comparing FEA results obtained from areas located far away from the cross bore, a distance exceeding 2.5 cross-bore diameters, to their corresponding analytical results calculated based on Lame's theory. The errors between the two methods were calculated by subtracting analytical solutions from finite element solutions. A percentage error of less than 5% was regarded to be within the acceptable error margin in accordance with most practical engineering applications.

3. Results and Discussion

Results of elastic SCF in thick-walled cylinders with oblique circular cross bore at radial and offset positions are presented in Figures 7 to 20 for thickness ratios 1.4, 1.5, 1.75, 2.0, 2.25, 2.5 and 3.0.

Generally, similar patterns with slight differences in stress magnitudes were exhibited in both graphs of Von Mises and Tresca, as illustrated in Figures 7 to 20. These observations were attributed to the computational method of calculating the elastic stresses.

For instance, Tresca's theory takes into consideration maximum and minimum principal stresses only. Meanwhile, the Von Mises criterion uses all three principal stresses.

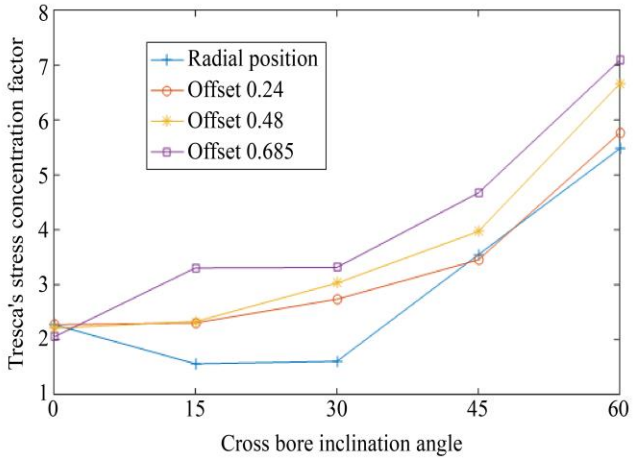

Fig. 7 Tresca stress for thickness ratio 1.4

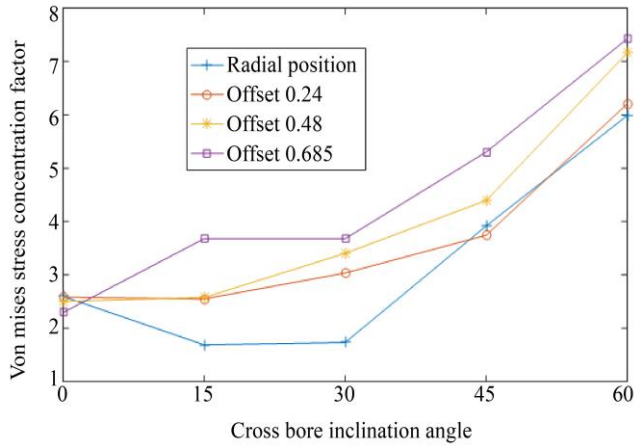

Fig. 8 Von Mises stress for thickness ratio 1.4

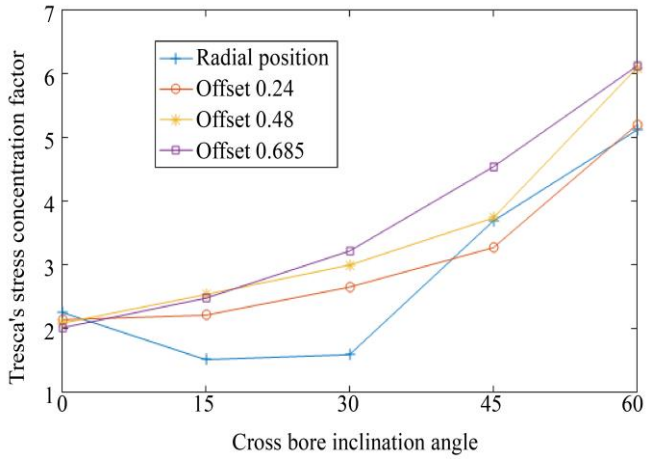

Fig. 9 Tresca stress for thickness ratio 1.5

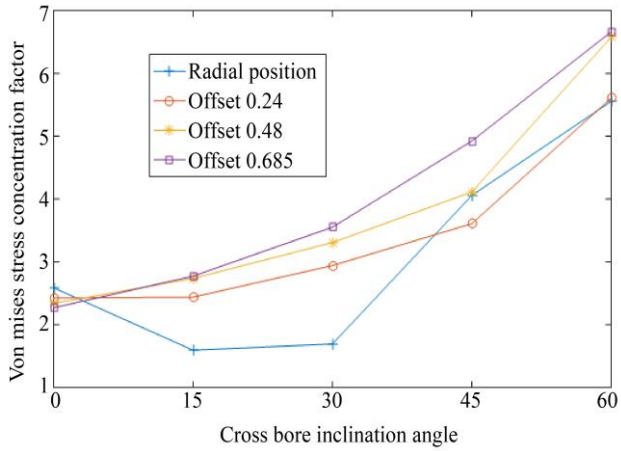

Fig. 10 Von Mises stress for thickness ratio 1.5

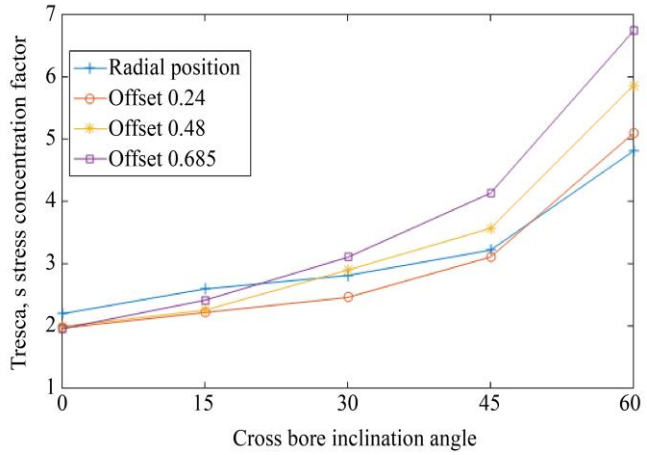

Fig. 11 Tresca stress for thickness ratio 1.75

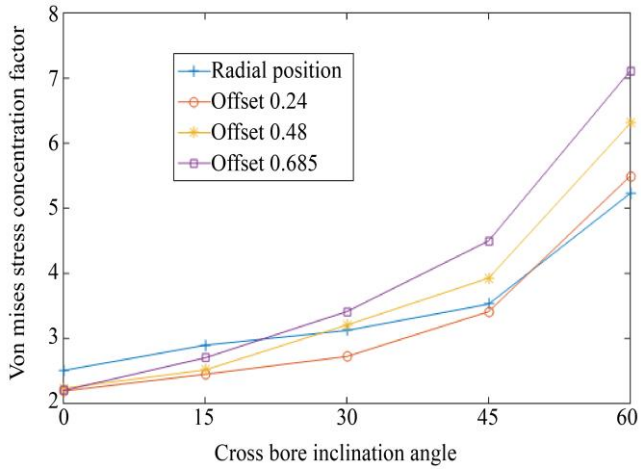

Fig. 12 Von Mises stress for thickness ratio 1.75

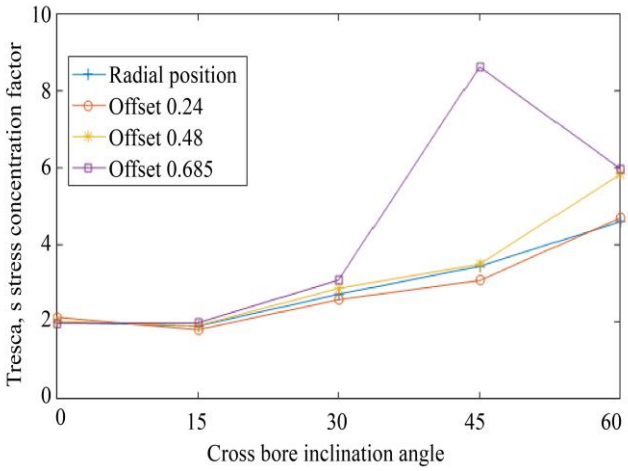

Fig. 13 Tresca stress for thickness ratio 2.0

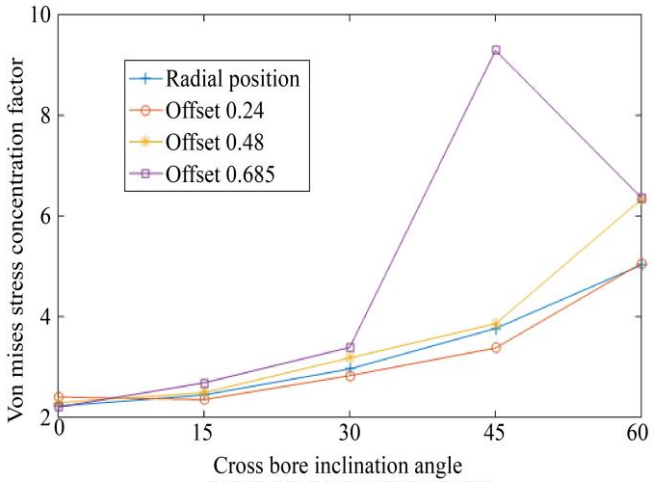

Fig. 14 Von Mises stress for thickness ratio 2.0

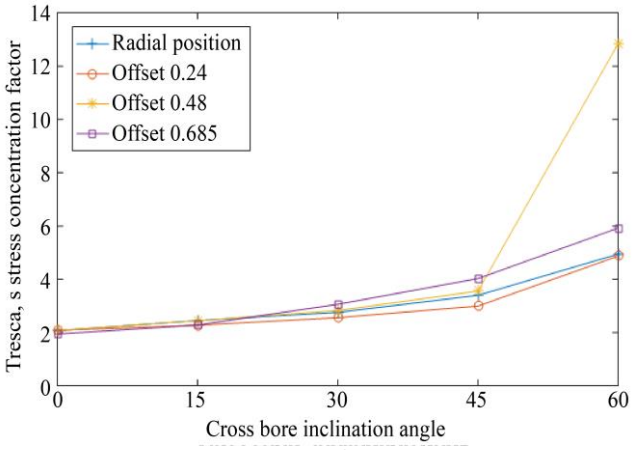

Fig. 15 Tresca stress for thickness ratio 2.25

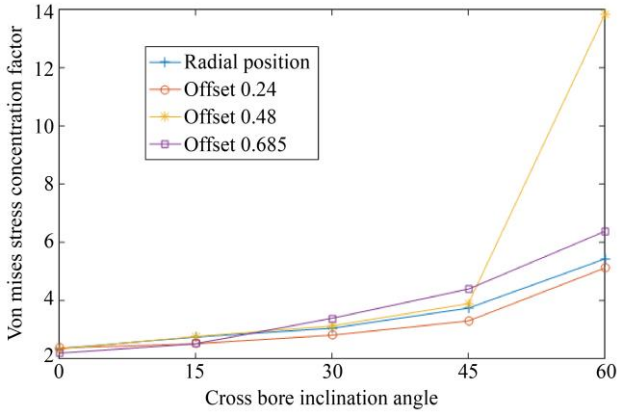

Fig. 16 Von Mises stress for thickness ratio 2.25

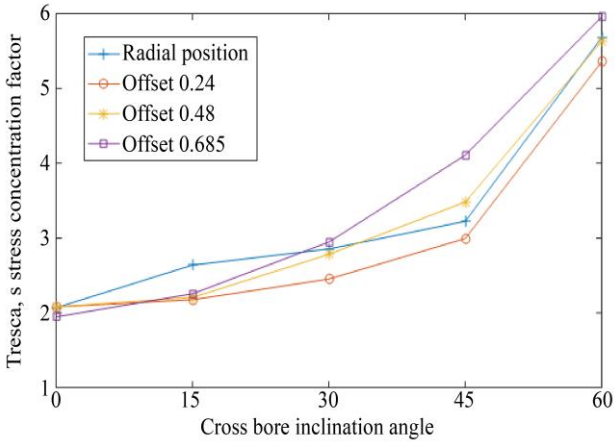

Fig. 17 Tresca stress for thickness ratio 2.5

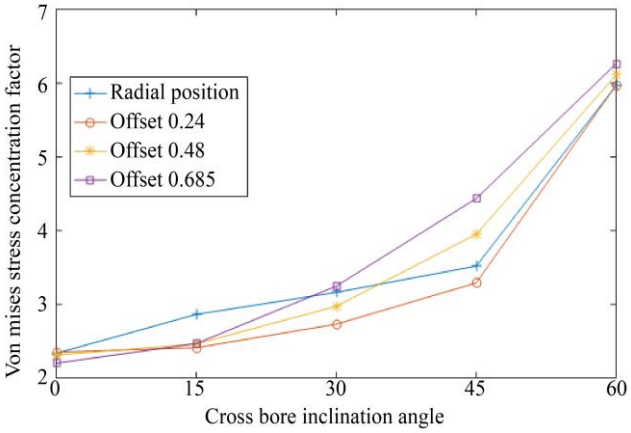

Fig. 18 Von Mises stress for thickness ratio 2.5

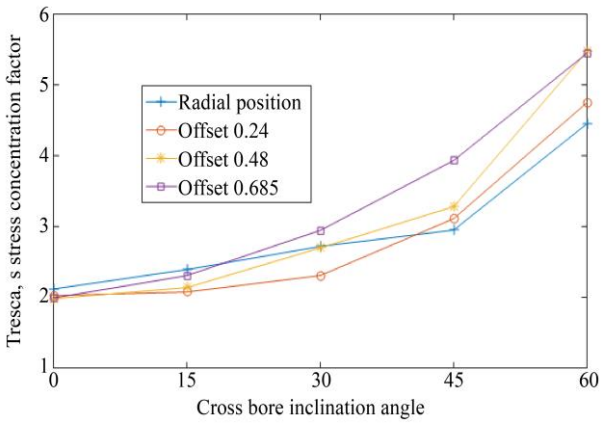

Fig. 19 Tresca stress for thickness ratio 3.0

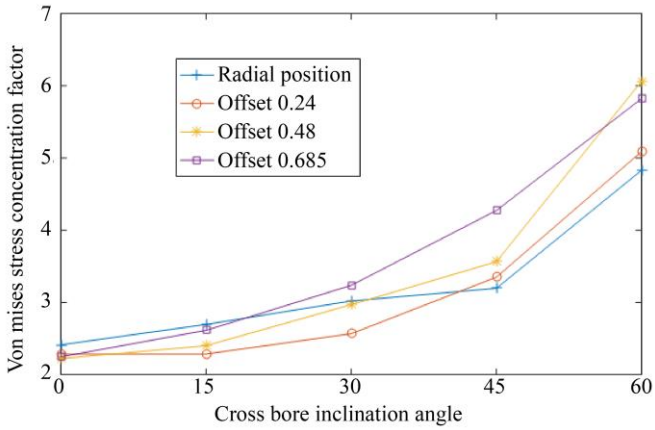

Fig. 20 Von Mises stress for thickness ratio 3.0

With the exception of thickness ratios 1.4 and 1.5, the magnitude of SCFs was observed to increase with an increase in the oblique angle. This occurrence was attributed to the change in the cross-bore shape when viewed through the intersection of the main bore and cross-bore (see Figures 21 and 22). The viewed shape of the cross bore in Figure 22 resembled an ellipse having major 'a' and minor 'b' diameters.

In an ellipse, when the orientation of the major diameter is parallel to the axial direction of the cylinder and the minor diameter is parallel to the direction of the hoop stress, the resulting shape resembles a crack. This diametrical configuration leads to high magnitudes of SCF in the vessel, as cited by Harvey [10] and Adenya [9] studies. In fact, an earlier study by Cheng [16] recommended against positioning the cross bore in any oblique positions.

On the other hand, minimum SCFs were observed at an inclination angle of 15° at thickness ratios of 1.4 and 1.5, an occurrence attributed to pre-yielding. Due to the low structural stiffness of the cylinder, stresses around the cross bore rise rapidly until they reach the yield point, resulting in plastic deformation. This plastic deformation leads to a reduction of stresses. This stress reduction strategy is adequate as long as the plastic deformation is confined within a continuous elastic stress field and the vessel is not subjected to alternating loads. Hence, the failure of the cylinder can only occur due to the application of tensile stress instead of yielding. As the thickness ratio increases beyond, the structural stiffness of the cylinder increases, thus hindering sharp rises in stresses that can result in pre-yielding; hence, the results have elevated SCF magnitudes.

Generally, in all the studied cylinders, inclined cross bores at offset ratios of 0.685 gave higher magnitudes of SCF than those posited at 0 (radial position), 0.24 and 0.48. In contrast, low magnitudes of SCF were noted at offset positions when the cross bores were not inclined (at 0°) with thickness ratios of 1.75, 2.25, 2.5 and 3.0) (Figures 11 to 20).

This occurrence is because whenever a circular cross bore is drilled in an offset position, the axis of the circular cross bore cylinder does not intersect with that of the main bore.

When viewed at the intersection between the cross bore and main bore, the resulting configuration resembles a slender elliptical hole with its major diameter 'a' parallel to the direction of hoop stress and minor diameter 'b' parallel to the axial direction. This configuration tends to be more pronounced when the offset position is moved further away from the central axis of the cylinder. The diameter configuration, where $a > b$ leads to a reduction in stress concentration.

Drilling holes in highly stressed regions of a pressure vessel can lead to severe weakening, particularly when subjected to fluctuating stress states. It is, therefore, recommended that holes be located where SCF is as low as possible. The locations where SCF is low for each thickness ratio are indicated in Table 3. The lowest SCF magnitude ranged from 1.511 to 1.980 for Tresca theory, while those of Von Mises were between 1.596 and 2.23. It was also observed that the difference between Tresca and Von Mises elastic SCF ranged from 5.63% to 13.1%, lower than that predicted in plain undrilled cylinders of 15.5%.

Figure 4 shows a comparison of results for elastic SCFs for similar geometrical configurations in the reviewed literature with those from the current studies for both Tresca's and Von Mises's theories. From Figure 4, the current study shows an improvement of elastic SCF for Tresca's theory of 39.56% and 7.69% for radial circular and oblique cross bores. Meanwhile, that of Von Mises improved by 4478%.

Unlike the current study, the previous studies were carried out experimentally and analytically. Unfortunately, there was no data available from the reviewed literature that could be used for comparison for elastic SCF for offset

circular oblique cross bores at the time of the publication of this article. Therefore, the adoption of these research findings may act as the fundamental basis during the review of pressure vessel design codes to lower the current safety factors.

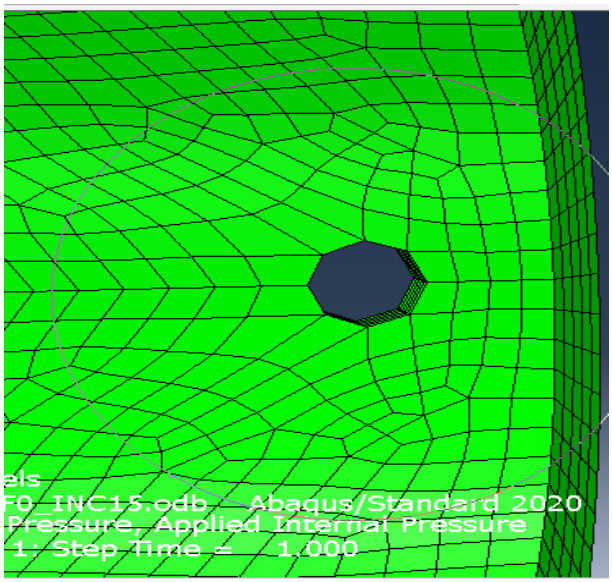

Fig. 21 Radial cross bore viewed at main/cross bore intersection

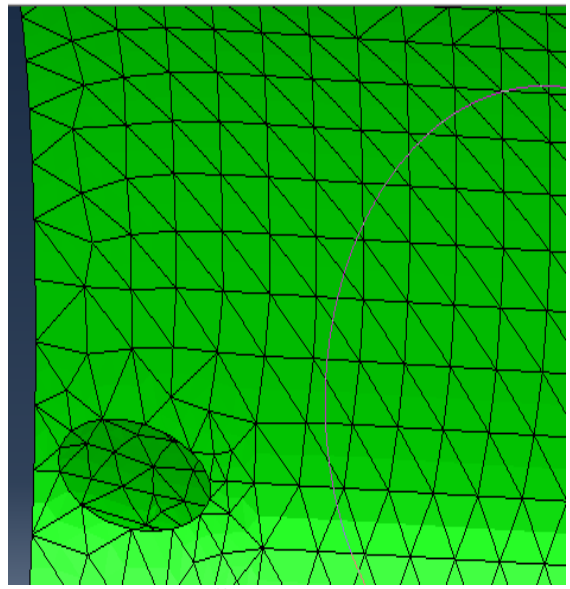

Fig. 22 Offset oblique cross bore viewed at main/cross bore intersection

Table 3. Minimum SCF and their locations

Thickness ratio	Location	Oblique angle ^{0}	Tresca SCF	Von Mises SCF	% Difference
1.4	Radial (0 offset)	15	1.560	1.689	8.27
1.5	Radial (0 offset)	15	1.511	1.596	5.63
1.75	0.685 offset	0	1.967	2.194	11.54
2.0	0.685 offset	0	1.958	2.203	12.51
2.25	0.685 offset	0	1.947	2.189	12.43
2.5	0.685 offset	0	1.946	2.201	13.10
3.0	0.48 offset	0	1.98	2.223	12.27

Table 4. Comparison between Tresca's and Vonmises Elastic SCFs from the reviewed literature

		Tresca theory		**Von mises theory**
Authors	Methodology	Radial Circular	Radial Oblique	Radial Circular
Cole [14]	Experimental	2.500	1.690	-
Ford and Alexander [1]	Analytical	2.500	-	2.89
Current study	Numerical	1.511	1.560	1.596

Further analysis of the optimal locations given in Table 3 was done to determine the internal static pressure at which yielding starts P_f using Equation (4) [17].

$$P_f = \frac{\sigma_y P_i}{\text{Failure Stress}} \quad (4)$$

Where $\boldsymbol{\sigma_y}$ is the Yield Strength

$\boldsymbol{P_i}$ is the Internal Pressure

The yielding pressure increased with an increase in thickness ratio ranging from 39.24 to 56.12 and 41.86 to 57.69 for Tresca and Von Mises theories, respectively. It is worth noting that sound judgment and experience are necessary in deciding on SCF to allow for geometrical effects and other related flaws.

Table 5 illustrates the calculated yielding pressures for Tresca and Von Mises theories.

Table 5. Yield pressures

Thickness ratios	Tresca yielding pressure (MPa)	Von Mises yielding pressure (MPa)
1.4	39.24	41.86
1.5	41.97	42.89
1.75	43.01	44.14
2.0	47.87	49.13
2.25	51.5	52.91
2.5	53.95	55.08
3.0	56.12	57.69

4. Conclusion and Recommendation

1. Generally, most of the studied cylinders had their lowest SCF values at 0o and highest at 600.
2. The lowest and highest SCFs were noted at K = 1.5 and 3.0 with magnitudes of 1.511 and 1.98 for Tresca and 1.596 and 2.223 for Von Mises.
3. The location with the lowest SCF magnitudes occurred when offset cross bores were positioned radially in a non-inclined position.
4. The percentage difference between Tresca and Von Mises elastic SCF ranged from 5.63% to 13.1%.
5. The yielding pressure increased with an increase in thickness ratio ranging from 39.24 to 56.12 and 41.86 to 57.69 for Tresca and Von Mises theories, respectively.

The current study recommends using three-dimensional experimental work using either photo-elasticity or strain gauge methods to validate further the results present in this study.

Funding Statement

This research has been funded by the Department of Mechanical Engineering at Walter Sisulu University, South Africa.

References

[1] Hugh Ford, and John Malcolm Alexander, *Advanced Mechanics of Materials*, 2nd ed., E. Horwood, pp. 1-672, 1977. [Google Scholar] [Publisher Link]

[2] L.M. Masu, and G. Craggs, "Fatigue Strength of Thick-Walled Cylinders Containing Cross Bores with Blending Features," *Proceedings of the Institution of Mechanical Engineers, Part C: Journal of Mechanical Engineering Science*, vol. 206, no. 5, pp. 299-309, 1992. [CrossRef] [Google Scholar] [Publisher Link]

[3] T. Comlekci et al., "Elastic Stress Concentration at Radial Crossholes in Pressurized Thick Cylinders," *The Journal of Strain Analysis for Engineering Design*, vol. 42, no. 6, pp. 461-468, 2007. [CrossRef] [Google Scholar] [Publisher Link]

[4] P. Makulsawatudom, D. Mackenzie, and R. Hamilton, "Stress Concentration at Crossholes in Thick Cylindrical Vessels," *The Journal of Strain Analysis for Engineering Design*, vol. 39, no. 5, pp. 471-481, 2004. [CrossRef] [Google Scholar] [Publisher Link]

[5] Avinash Kharat, and V.V. Kulkarni, "Stress Concentration at Openings in Pressure Vessels – A Review," *International Journal of Innovative Research in Science, Engineering and Technology*, vol. 2, no. 3, pp. 670-678, 2013. [Google Scholar] [Publisher Link]

[6] N. Kiplagat, "*Optimal Geometric Configuration of a Cross Bore in Thick Compound Cylinders*," Master's Thesis, Vaal University of Technology, pp. 1-24, 2021. [Google Scholar] [Publisher Link]

[7] John Muniu Kihiu, "*Numerical Stress Characterization in Cross-Bored Thick Walled Cylinders under Internal Pressure*," Thesis, The University of Nairobi, pp. 1-288, 2002. [Google Scholar] [Publisher Link]

[8] Leonard M. Masu, "*The Effect of Cross Bore Geometry on the Strength of Pressure Vessels*," Thesis, University of Leeds, 1989. [Google Scholar] [Publisher Link]

[9] C.A. Adenya, and J.M. Kihiu, "*Stress Concentration Factors in Thick Walled Cylinders with Elliptical Cross-Bores*," Master's Thesis, Jomo Kenyatta University of Agriculture and Technology, pp. 1-20, 2010. [Google Scholar] [Publisher Link]

[10] Gérard C. Nihous, Christopher K. Kinoshita, and Stephen M. Masutani, "Stress Concentration Factors for Oblique Holes in Pressurized Thick-Walled Cylinders," *Journal of Pressure Vessel Technology*, vol. 130, no. 2, pp. 1-7, 2008. [CrossRef] [Google Scholar] [Publisher Link]

[11] P.K. Nziu, "*Optimal Geometric Configuration of a Cross Bore in High Pressure Vessels*," Thesis, Vaal University of Technology, pp. 1-24, 1998. [Google Scholar] [Publisher Link]

[12] Jaime Gimeno, Oscar Venegas, and Javier Urbano, "Stress Concentration Factor in Vessels with Circular Crosshole: Continuous Parameters Analysis," *International Journal of Pressure Vessels and Piping*, vol. 199, 2022. [CrossRef] [Google Scholar] [Publisher Link]

[13] P. K. Nziu, and L. M. Masu, "Elastic Strength of High Pressure Vessels with a Radial Circular Cross Bore," *International Journal of Mechanical and Production Engineering Research and Development*, vol. 9, no. 3, pp. 1275-1284, 2019. [Google Scholar]

[14] B.N. Cole, "Strategy for Cross-Bores in High Pressure Containers," *Journal of Mechanical Engineering Science*, vol. 11, no. 2, pp. 151-161, 1969. [CrossRef] [Google Scholar] [Publisher Link]

[15] John F. Harvey, *Theory and Design of Pressure Vessels*, 3rd ed., Van Nostrand Reinhold, pp. 1-623, 1985. [Google Scholar] [Publisher Link]

[16] Y.F. Cheng, "*Stress Concentration around Inclined Holes in Pressurized Thick-Walled Cylinders*," Technical Report, pp. 1-27, 1978. [Google Scholar] [Publisher Link]

[17] B.N. Phalguna, "Stress and Failure Analysis of Thick Walled Cylinder with Oblique Hole," *International Journal of Engineering Research and Technology*, vol. 6, no. 8, pp. 36-45, 2017. [CrossRef] [Google Scholar] [Publisher Link]